# Water Heater 1/2" Safety Valve

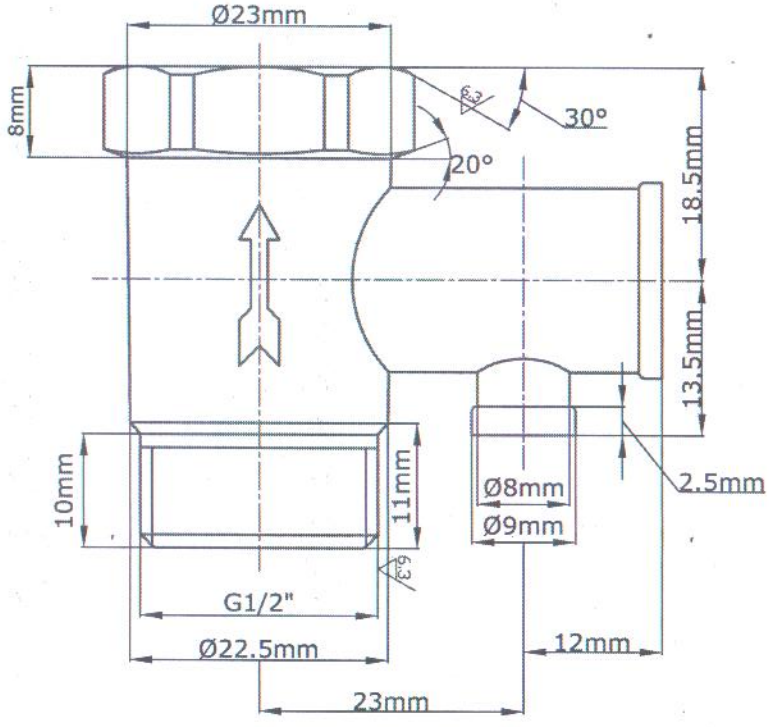


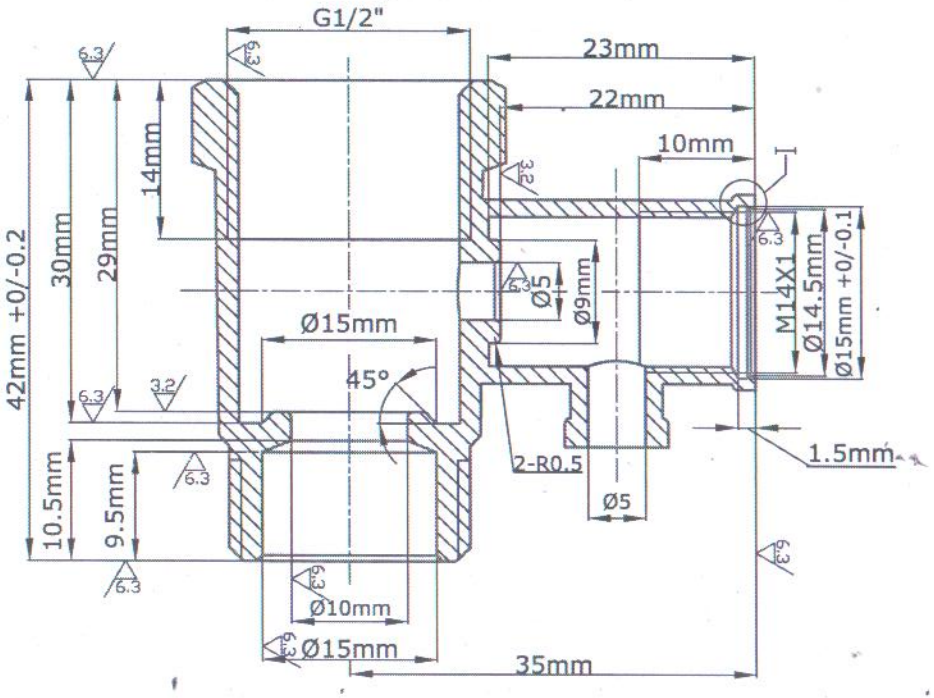


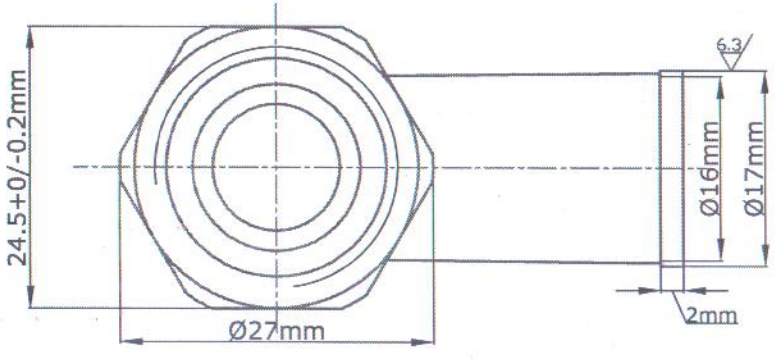


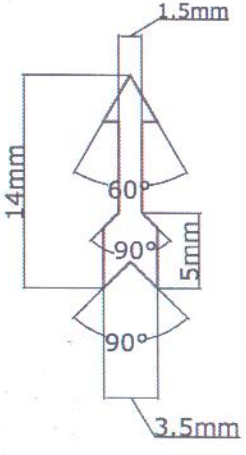


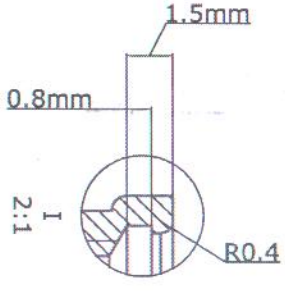


| | | | | |
|---|---|---|---|---|
| Drawn By : | DN | Quest For Excellence | **BOHRA ENGINEERING & Trading CORPN.** | |
| Approved By : | AAB | | | |
| Check By : | BG | | | |
| Date : | 19.05.10 | | Part Name : | 1/2" Safety Valve |
| Scale : | Not in Scale | | Part Number : | BE - |
| If in doubt ask : | Computer generated drawing | | Drawing No : | |
| All dimenssions are in mm | | | Material : | Brass |
| Remove all burs & Sharp edges | | | Remark : | |

| | | | |
|---|---|---|---|
| m | f | ?? | ?? |
| ±0.10 | ±0.05 | 0?? | |
| ±0.20 | ±0.10 | 6?30 | |
| ±0.30 | ±0.15 | 30?100 | |
| ±0.50 | ±0.20 | 100?300 | |

??????????? ????????

?? ∇